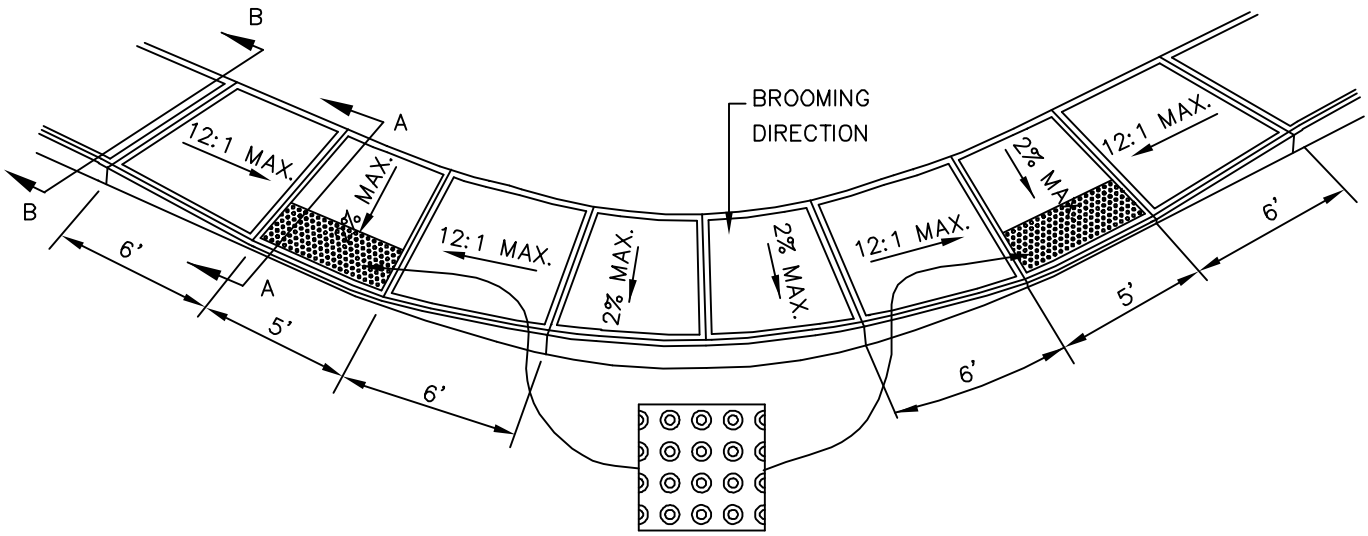

RAMP TEXTURE PATTERN
(TRUNCATED DOMES)
DETAIL

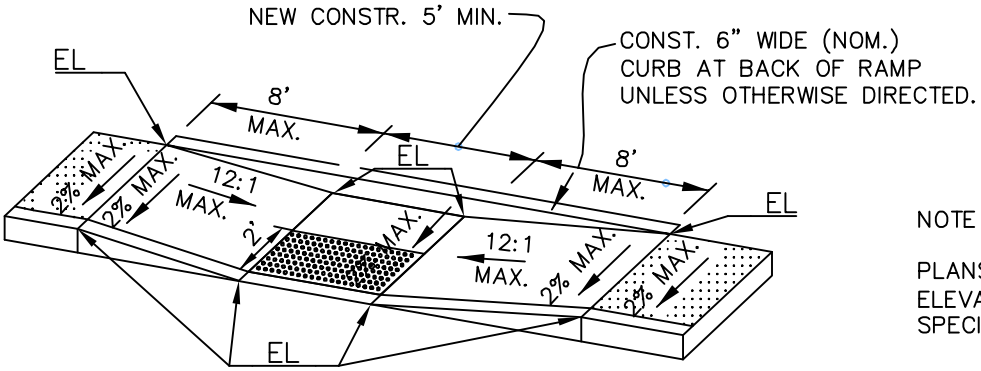

PARALLEL SIDEWALK RAMP DETAIL

NOTE TO DESIGNER:

PLANS SHALL PROVIDE ELEVATION (EL) AT EACH SPECIFIED LOCATION.

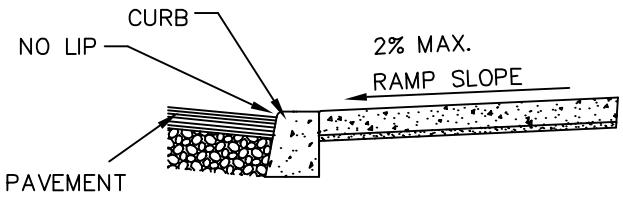

CURB RAMP DETAIL A–A

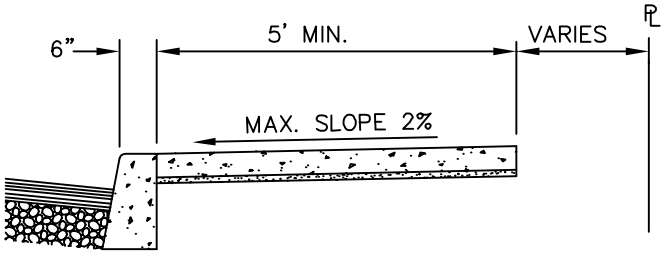

SIDEWALK DETAIL B–B

NOTES

SEE DETAIL S960 FOR STANDARD DETAILS AND NOTES.

REVISION	DATE	BY

DEPARTMENT OF TRANSPORTATION AND DEVELOPMENT

150 BEAVERCREEK ROAD
OREGON CITY, OR 97045

CLACKAMAS COUNTY

APPROVAL DATE: 1/1/10 SCALE: N.T.S.

DOUBLE PARALLEL CURB RAMP ON STANDARD SIDEWALK WITHOUT PLANTER STRIP

STANDARD DRAWING

S930

S:\Engineering\Roadway Standards\2010 Roadway Standards\2010 Standards for Publish\Drawings\DWGs\ S100-S960.dwg