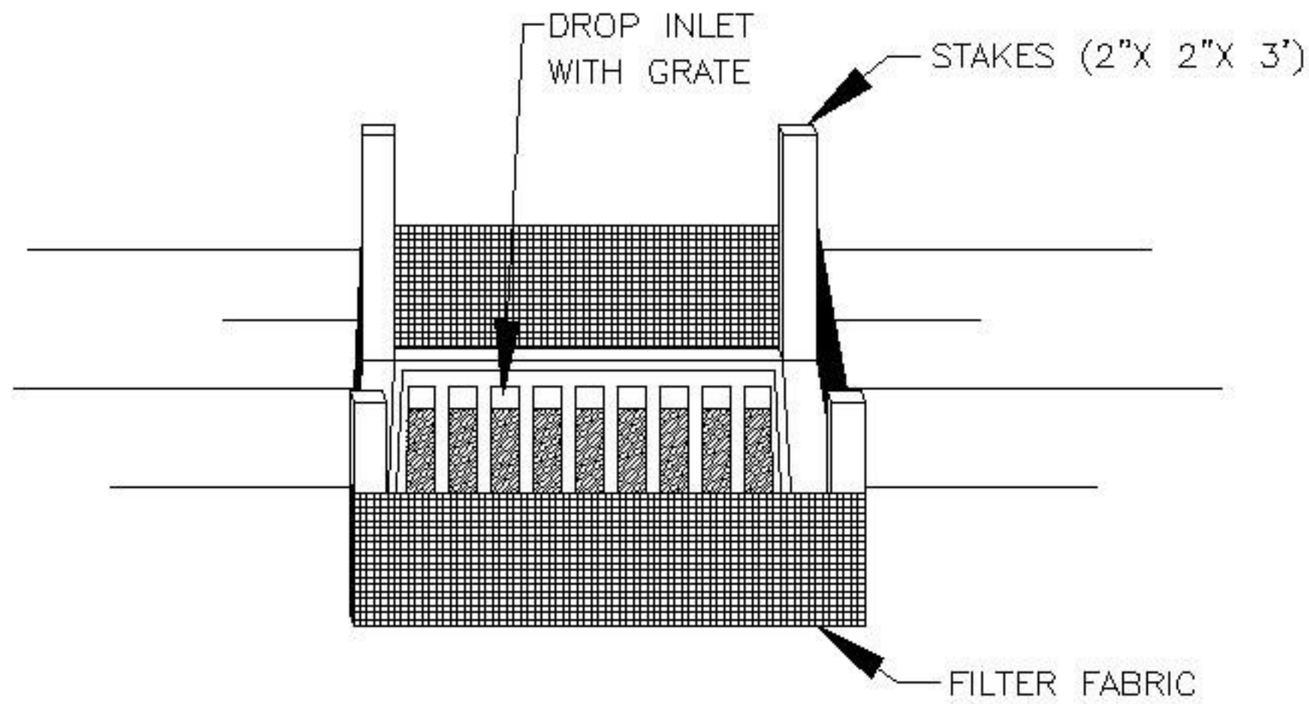

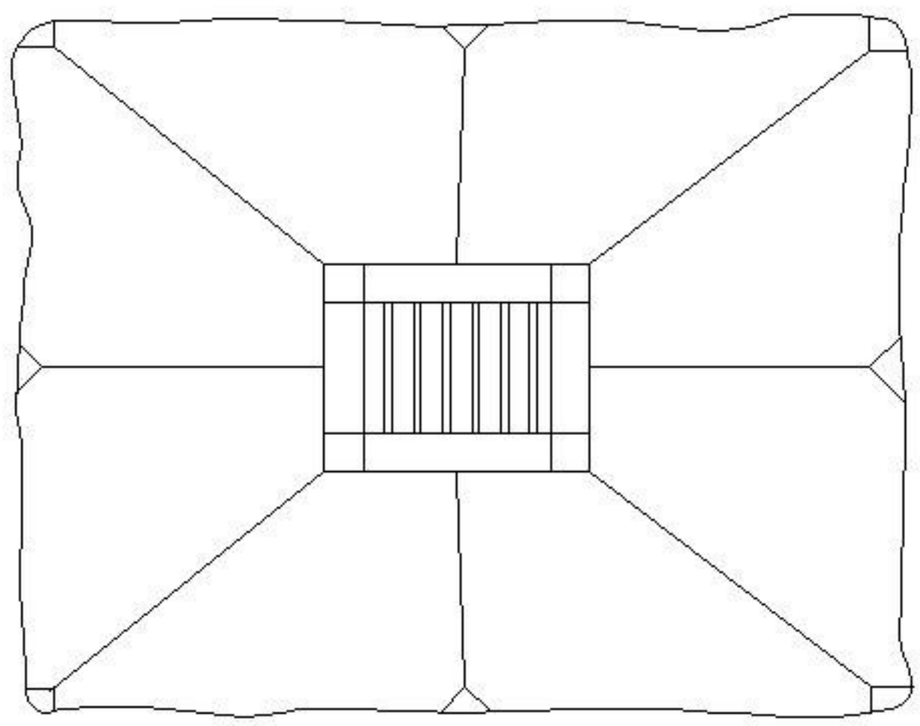

PLAN VIEW
Slope 4:1

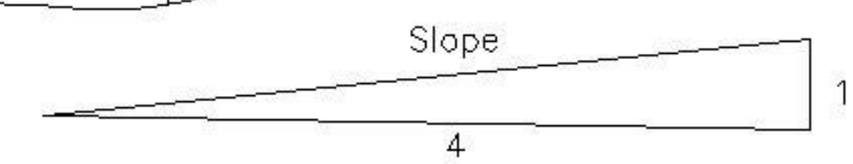

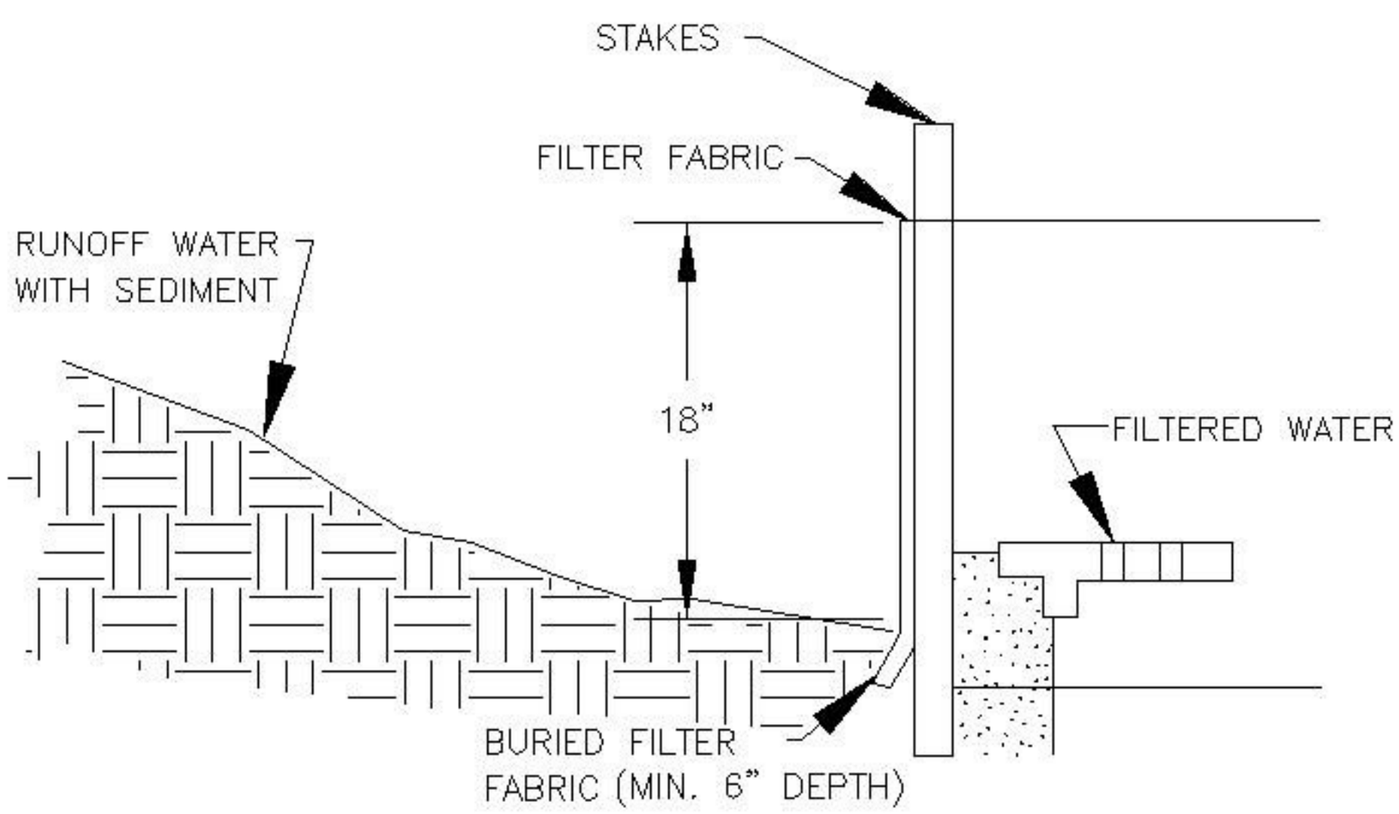

PROFILE

INLET PROTECTION TYPE 3

DETAIL DRAWING 4–17

REVISED 01–09