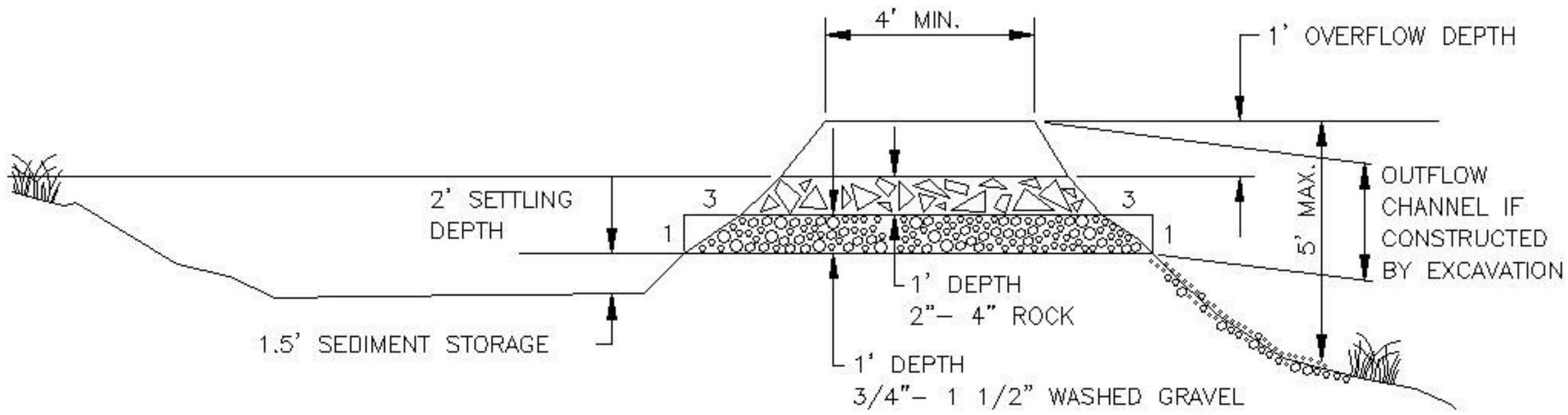

CROSS SECTION

NTS

NOTE: MAY BE CONSTRUCTED BY EXCAVATION OR BY BUILDING A BERM.

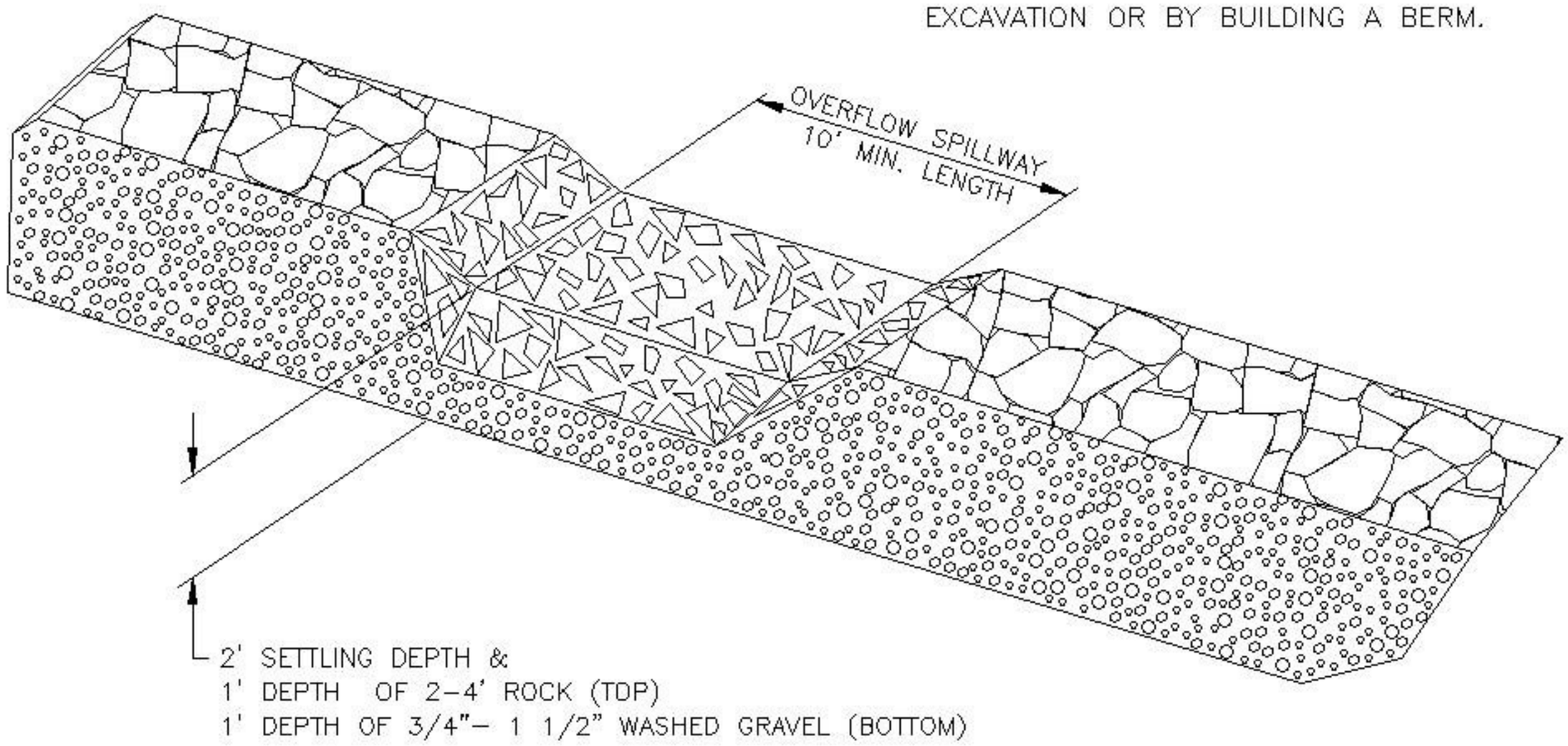

SEDIMENT TRAP OUTLET

NTS

NOTE:
A FILTER FABRIC FENCE OR SIMILAR FILTER MUST BE CONSTRUCTED TO FILTER RUNOFF FROM THE SEDIMENT TRAP PRIOR TO DISCHARGE FROM THE CONSTRUCTION SITE.

SEDIMENT TRAP

DETAIL DRAWING 4–24

REVISED 01–09